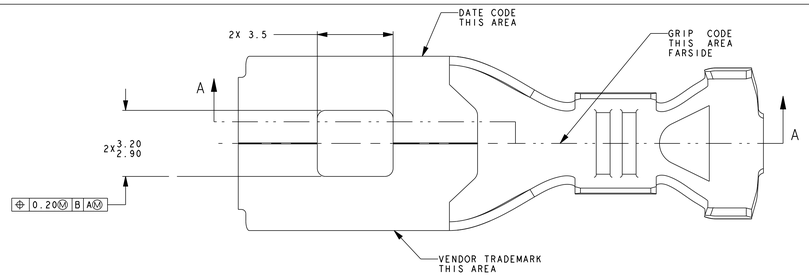

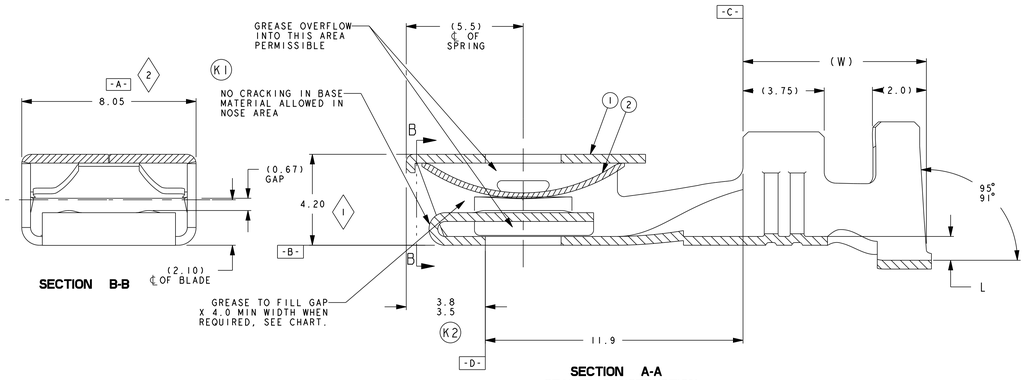

SECTION B-B

SECTION A-A
SEALED CONSTRUCTION

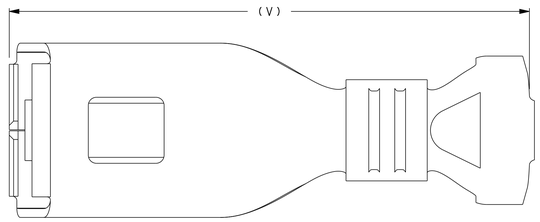

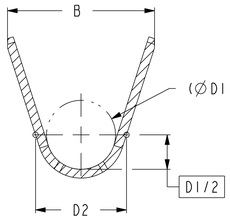

SECTION F-F

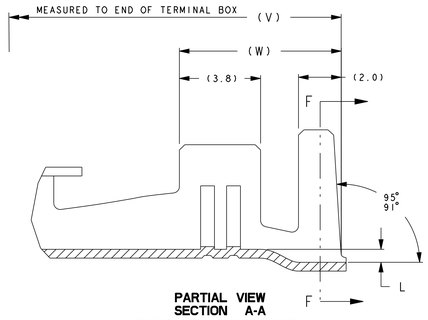

PARTIAL VIEW
SECTION A-A
UNSEALED CONSTRUCTION

SCALE 1.000

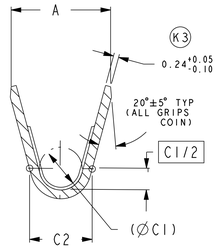

SECTION E-E
FOR SEALED & UNSEALED CONSTRUCTION CORE GRIP

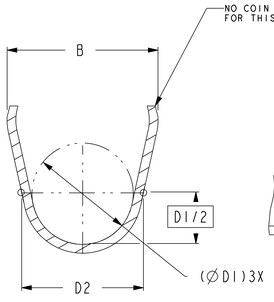

SECTION C-C
CABLE SEAL ONLY

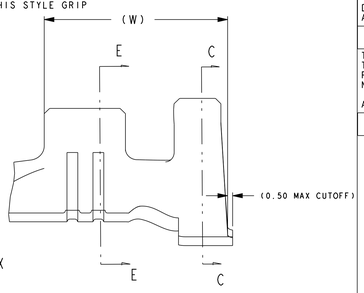

CABLE SEAL VIEW
PARTIAL SECTION A-A

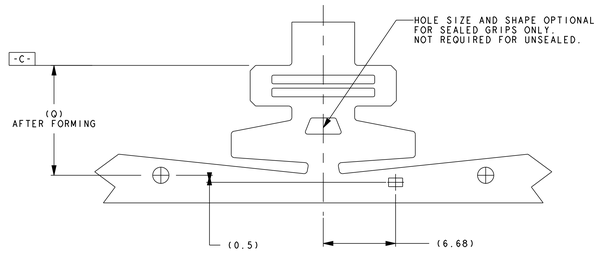

GRIP BLANK FOR SEALED AND UNSEALED CONSTRUCTION
VIEW NOT TO SCALE

LTRS	REVISIONS		
ORIGINATOR	CHECKER	ENG APP	MATL APP
M1 UPDATED DETAILS FOR CABLE SEAL P/NS FOR 10 GA & 12 GA DATE: 20080429 CAD:YES AELE-E-11786306-070			
VRB	RR		
N1 RELEASED P/N AU5T-14474-DAA DATE: 20090903 CAD:YES AELE-E-11786306-108			
VRB	RR		
P1 UPDATED DRAWING, NOTES, VIEWS. NO FUNCTIONAL CHANGES. DATE: 20100602 AELE-E-11786306-127			
R CUE	RR		
R1 RELEASED DU5T-14474-TA R2 UPDATED CHARTS, MATERIAL CALLOUT NO FUNCTIONAL CHANGES. DATE: 20110308 AELE-E-11786306-145			
R CUE	JB		
S1 ADDED CU5T-14474-RA NO FUNCTIONAL CHANGES. DATE: 20110812 AELE-E-11786306-160			
R CUE	JB		
T1 CORRECTED MATERIAL TYPE 1 CALLOUT T2 UPDATED GRIP CHART RELEASED P/N BU5T-14474-PAA, RAA, SAA NO FUNCTIONAL CHANGES. AELE-E-11786306-168			
R.CUE	JB		

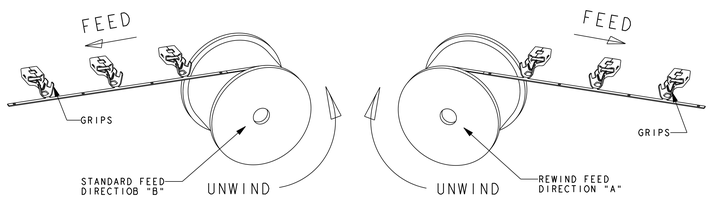

TERMINALS TO FEED AS SHOWN AFTER BEING REELED OFF PRODUCTION TOOL.
PACKAGING: PANCAKE REELS WITH PAPER INTERLEAF

NOTE: CUSTOMER REQUESTS FOR REWIND PARTS WILL INCLUDE
AN "RW_" AT THE END OF THE BILL OF MATERIAL (B.O.M.) PART NUMBER. EXAMPLE:
STANDARD WIND: FC1 PART NUMBER
REVERSE WIND: FC1 PART NUMBER THEN RWA.

THIS PART NUMBERING SYSTEM WILL BE AVAILABLE FOR ALL CHARTED PART NUMBERS.

REELING OPTIONS

MATING BLADE VIEW

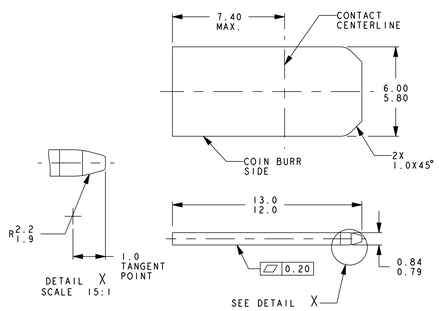

MATERIAL: COPPER ALLOY 50% MIN I.A.C.S
TIN PLATED

NOTES:

1) ◇2 INDICATES SPC DIMENSION (2)

2) (K3) INDICATES CRITICAL INSPECTION DIMENSION (3)

3) MEETS ALL ES-F8DB-14A464-AA TEST SPECIFICATIONS.

4) TERMINAL SYMMETRICAL ABOUT CENTRELINE EXCEPT AS SHOWN.

5) DIMENSIONAL TOLERANCE:
1 PLACE ±0.30
2 PLACE ±0.13
ANGULAR ±2°

6) PARTS CONFORM TO THE ELECTRICAL CONNECTION SUBSYSTEM DESIGN SPECIFICATION (SDS) REV 1.4 DATED 1-28-97 EXCEPT:
EL-0070-TERMINAL PLATING MARK NOT SHOWN

7) FOR CAVITY SPECIFICATION INFORMATION REFERENCE FCI DRAWING NUMBER A25009

8) PART MUST COMPLY WITH AVP(T404/T406)

ITEM (1)

MATERIAL: 0.398±0.013 C194 COPPER ALLOY TO ASTM B-465
100% HALT TIN PLATED 0.0013/0.0038 THICK
TENSILE STRENGTH: 413-483 Mpa
YIELD STRENGTH: 379 Mpa MIN.
ELONGATION IN 51MM:2%MIN.

ITEM (2)

MATERIAL: 0.254 ±0.010 C70260 TM04 COPPER TO ASTM B-422
100% HALT TIN OR 95/5 TIN SILVER PLATED 0.0013/0.0038 THICK
TENSILE STRENGTH: 689-862 Mpa
YIELD STRENGTH: 689 Mpa MIN.
ELONGATION IN 51MM:1%MIN.

FORD PART NO.	GREASE	GRIP CODE	WIRE SIZE METRIC	WIRE SIZE AWG	CONDUCTOR CRIMP WIDTH	CONDUCTOR CRIMP HEIGHT	INSULATION CRIMP WIDTH	INSULATION CRIMP HEIGHT	CABLE SEAL P/N
DU5T-14474-TA (F286010)	N/A	16	0.75	18	2.80	1.50	3.60	2.40	N/A
			1.00	---		1.55		2.60	
BU5T-14474-RAA (F560310)	NYE-8917		1.25	16		1.60		2.80	
			1.50	---		1.65		2.90	
CU5T-14474-RA (F409110)	N/A	12	2.50	---	3.10	2.05	3.80	3.30	N/A
BU5T-14474-PAA (F660310)	NYE-8917								
IL5T-14474-AA (54001200)		12	2.0	14	3.10	1.95	5.10	4.90	USE XL3T-14603-BA FOR HEAVY WALL APPLICATIONS. (3.8-4.7 INSULATION O.D.) USE IL5T-14603-BA FOR THIN WALL APPLICATIONS. (3.10-4.10 INSULATION O.D.)
			3.0	12		2.05		5.10	
AU5T-14474-DAA (FCI: F803600)	NYE-8917	12	2.0	14	3.10	1.95	5.10	4.90	
			3.0	12		2.05		5.10	
XL3T-14474-BA (FCI: 54001004)		10	4.0	10	3.85	2.35	6.10	5.60	
			5.0			2.45		5.70	
			6.0			2.60		5.90	
4L3T-14474-BA (FCI: 54001021)	NYE-8917	10	4.0	10	3.85	2.35	6.10	5.60	
			5.0			2.45		5.70	
			6.0			2.60		5.90	
YFIT-14474-BA (FCI:54001007)	N/A	10	4.0	10	3.85	2.35	4.15	4.35	N/A
BU5T-14474-SAA (FCI:F760310)	NYE-8917		5.0			2.45		4.60	
			6.0			2.60		4.70	

A ±0.4	B ±0.4	(ØC1)	C2	(ØD1)	D2	L	(Q)	(V)	(W)	CABLE SEAL	WIRE CODE	FORD PART NO.
3.5	4.2	1.2	1.9	2.0	2.9	0.4	10.85	23.4	7.5	NO	16	DU5T-14474-TA BU5T-14474-RAA
5.6	8.8	2.4	3.4	5.4	6.5	1.1	10.50	24.0	8.0	YES	10	XL3T-14474-BA 4L3T-14474-BA
4.6	4.9	2.0	2.9	2.8	3.8	0.4	10.85	23.4	7.5	NO	12	CU5T-14474-RA BU5T-14474-PAA
4.6	6.9	2.0	2.9	4.6	5.6	0.6	10.50	24.0	8.0	YES	12	IL5T-14474-AA AU5T-14474-DAA
5.6	6.8	2.4	3.4	3.2	4.2	0.4	10.85	23.4	7.5	NO	10	YFIT-14474-BA BU5T-14474-SAA

PART NUMBER
BU5T-14474-SAA
BU5T-14474-RAA
BU5T-14474-PAA
CU5T-14474-RA
DU5T-14474-TA
AU5T-14474-DAA
4L3T-14474-BA
IL5T-14474-AA
YFIT-14474-BA

REFERENCE

PART MUST COMPLY WITH MATERIAL SPECIFICATION WSS-M99P9999-A1 TO HELP SAFEGAURD HEALTH, SAFETY AND THE ENVIRONMENT.

DRAFTED IN ACCORDANCE WITH FAO ENGINEERING DRAFTING STANDARD CURRENT AT INITIAL RELEASE

3 RD ANGLE PROJ
DIMENSIONS IN MILLIMETERS

CAD TYPE	CAD LOC.	CAD FILE	DTM
X-PROE	N/A		IS MASTER
OPER. NO.	UNIT	DRAWING XL3T-14474-BA	
DESIGN GDL	DETAIL VRB	TITLE TERMINAL, WIRE SNAP ON FEMALE	SHT 1 OF 1
CHECKED VRB	SAFETY		
SCALE 10:1	DATE 20080417	DIVISION PLANT	

DRW SIZE A0/E

Mouser Electronics

Authorized Distributor

Click to View Pricing, Inventory, Delivery & Lifecycle Information:

Aptiv:

54001200 54001004 F409110 F286010 F760310 F409110-L F286010-L F760310-L